E-TENDER
FOR
FABRICATION & SUPPLY
OF
SCIENCE PARK EXHIBITS
AT
NATIONAL SCIENCE CENTRE, DELHI

NATIONAL SCIENCE CENTRE
(NATIONAL COUNCIL OF SCIENCE MUSEUMS)
NEAR GATE NO. 2, PRAGATI MAIDAN
NEW DELHI – 110 001

NATIONAL SCIENCE CENTRE,
NEAR GATE No. 2, PRAGATI MAIDAN,
BHAIRON MARG, NEW DELHI-110001

TENDER No. NSCD/18011/E-TENDER-10/2018-19

NOTICE INVITING E-TENDER

On-line Digitally signed E-Tenders are invited in two Bid System for **"Fabrication & Supply of Science Park Exhibits at Natioal Science Centre, Delhi"**. Agencies having proven experience and capable in executing the work / supply at a time may download the tender documents from the Central Public Procurement Portal (CPPP): http://eprocure.gov.in/eprocure/app

Bid Document Published Date	19th June, 2018 (5:00 P.M)
Bid Document Download Start Date	19th June, 2018 (5:00 P.M)
Bid Clarification Start Date	19th June, 2018 (5:00 P.M)
Bid Submission Start Date	20th June, 2018 (10:00 A.M)
Bid Clarification End Date	04th July, 2018 (04:00 P.M)
Bid Submission End Date	05th July, 2018 (02:00 P.M.)
Technical Bid Opening Date	06th July, 2018 (03:00 P.M.)
Earnest Money Deposit	**₹15,000/-** (Rupees Fifteen Thousand only)

The online bid both Technical Bid and Financial Bid, should be uploaded by the due date and time as per the above schedule. The responsibility to ensure the same lies with the bidders. Off-line tenders shall not be accepted and no request in this regard will be entertained whatsoever. **Online Technical Bid will be opened at the first instance in National Science Centre, Delhi at 03:00 p.m. on 06th July, 2018 for technical evaluation as well as selection of technically acceptable offers.** In the second stage, the Financial Bids of only the selected and techno-commercially acceptable offers / system / equipment will be opened. Decision of the Centre, regarding selection of eligible and qualified vendors / firms for opening the Financial Bid shall be final and binding on the bidders. Bidders may be present during opening of tenders.

NSC Delhi reserves the right to accept or reject any or all tenders in full or part without assigning any reason whatsoever. NSCD shall also not be bound to accept merely the lowest tender but the technical suitability, capability and superiority of the equipment / system as well as after sales service including infrastructure to render such service, etc. shall be of prime consideration for selection of the equipment /system.

CHECK L I S T

Check list of Tender No. **NSCD/18011/E-Tender-No.10/2018-19** for Fabrication & Supply of Science Park Exhibits at NSC, Delhi.

Sl. No.	Description	Yes	No
01	Whether E-Tender uploaded on Central Public Procurement Portal of Govt. of India in two parts (i.e. Technical & Commercial) separately. (please note that one set of original signed Technical bid must be delivered at NSC, Delhi before the time of bid opening).		
02	Whether Tender documents carefully studied & understood.		
03	Whether Tender documents duly signed and stamped on all pages is scanned and uploaded as Part – I of the Tender in Central Public Procurement Portal.		
04	Whether Declaration regarding Non-relation, duly signed and stamped, and scanned copy of the same uploaded as Part – I of the Tender in Central Public Procurement Portal. **Annexure-D**		
05	Whether Declaration certifying that there is no extra conditions quoted in the Offer Form duly signed and stamped, and scanned copy of the same uploaded as Part – I of the Tender in Central Public Procurement Portal. **Annexure-C**		
06	Weather Earnest Money of **₹15,000.00** submitted Online Demand Draft No. ……dated…… and Scanned copy of DD uploaded as Part – I of the Tender. Please note that the original DD should be couriered /hand delivered to NSC Delhi / Online payment details shall be sent to NSCD before last date of submission of the tender document.		
07	Did you visit the actual site for execution of the work/ supply before submitting the Tender		

Date: Signature of the Tenderer

Place : Official Seal

General Information and Instructions

1. The instruction given herein will be strictly binding on the tenderers and deviation, if any will make the tender or tenders liable to be considered invalid. Tenders incorporating additional conditions by the tenderer are liable for rejection.

2. Bids shall be submitted online only at CPPP website: https://eprocure.gov.in/eprocure/app Manual bids shall not be accepted.

3. The instruction given in **"Annexure-A" for "Instruction for Online Bid Submission"** should be strictly followed during submission of the Bid.

4. Bid documents may be scanned with 100 dpi with black and white option which helps in reducing size of the scanned document.

5. Bid should be submitted along with the **Earnest Money of ₹15,000/- (Rupees Fifteen Thousand Only)** by way of crossed Demand Draft / Pay Order on any commercial Banks or payment online by NEFT/RTGS payable in favour of **"NATIONAL SCIENCE CENTRE, Payable at DELHI**". Earnest Money deposit in the form of Bank Guarantee /Bond or any other instrument shall not be accepted and shall be rejected straightway. Earnest Money deposits in respect of such offers which are not accepted will be returned to the bidders within 30 working days from the date on which the final decision is taken about the source from which the items under tender are to be procured or within 2 (two) months from the date of the opening of the tenders, whichever is earlier. No interest will be paid on the Earnest Money deposited with the Council. Earnest Money deposit in respect of the successful bidders will be retained with the NSCD until entire execution of the order as per terms of the tender. If the successful bidder fails to execute the order strictly as per the NSCD's specification in full or part within the stipulated delivery period of the purchase order, the Earnest Money deposit retained with the NSCD shall be forfeited forthwith after cancellation of the concerned order. In case of non-receipt of EMD, the Tenders are liable to be rejected.

6. **Validity of Bids**: The Bids should remain valid for 90 days from the date of bid opening.

7. **Rejection of Bids:** Canvassing by the Bidder in any form, unsolicited letter and post-tender correction may invoke summary rejection. Conditional tenders will be rejected. Non-compliance of applicable General Information and Instruction will disqualify the Bid.

8. The tenderers should have Digital Signature Certificate (DSC) for filling up the Bids. The Person signing the tender documents should be authorized for submitting the on line e-tender.

9. The Financial Bid (BOQ) shall be filled in and signed by the authorized signatory online as per Proforma **"Annexure-H"** available at Central Public Procurement Portal e-tender system website http://eprocure.gov.in/eprocure/app. Off line Financial Bid shall not be accepted.

10. **Tender must be uploaded on-line in two separate sets - namely Set – 1 (Technical) on Central Public Procurement Portal. The contents of Cover shall be as follows:-**

Set – 1

i) **Technical (Techno-Commercial) BID duly filled-in and signed with official stamp. (as per Annexure-E format)**

ii) **General Terms & Conditions (as detailed in Annexure-B) duly signed with official stamp as a token of acceptance**

iii) **Scanned Copy of the current and valid Trade License and Dealership Certificate as applicable.**

iv) **Scanned Copy of ITR filed acknowledgement issued by Income Tax Department.**

v) **The 'Declaration' duly signed with official stamp (as detailed in Annexure-C & D).**

vi) **Scanned copy of Demand Draft / details of online payment for ₹15,000/- as Earnest Money Deposit.**

Set - 2

i) **The Financial Bid (as per Annexure-H) i.e. Schedule of Price Bid in the form of attached BOQ Proforma shall be duly filled in, digitally signed and uploaded online by the bidder.**

N.B. : The bidders shall consider the prevailing tax rates while quoting the rates. However, in the event of any changes in the statutory taxes and duties, the rates applicable at the time of payment shall be made by the competent authority of the NSC, Delhi against submission of supporting documentary evidence.

11. Order shall be placed in favour of the agency who has offered the lowest rate in individual items.

12. The authorities of National Science Centre, Delhi who does not bind themselves to accept the lowest tender, reserves the right to reject or accept any or all tenders wholly or partially without assigning and reason whatsoever.

ANNEXURE -A

NATIONAL SCIENCE CENTRE
(National Council of Science Museums)
Bharion Road, Near Gate No. 2, Pragati Maidan,
New Delhi-110001

TENDER No. : NSCD18011/E-Tender- No.10/2018-19

Instructions for Online Bid Submission

1. The bidders are required to submit soft copies of their bids electronically on the CPP Portal, using valid Digital Signature Certificates. The instructions given below are meant to assist the bidders in registering on the CPP Portal, prepare their bids in accordance with the requirements and submitting their bids online on the CPP Portal.
2. More information useful for submitting online bids on the CPP Portal may be obtained at https://eprocure.gov.in/eprocure/app

REGISTRATION

1) Bidders are required to enroll on the e-Procurement module of the Central Public Procurement Portal (URL: https://eprocure.gov.in/eprocure/app) by clicking on the link "**Online bidder Enrollment**" on the CPP Portal which is free of charge.
2) As part of the enrolment process, the bidders will be required to choose a unique username and assign a password for their accounts.
3) Bidders are advised to register their valid email address and mobile numbers as part of the registration process. These would be used for any communication from the CPP Portal.
4) Upon enrolment, the bidders will be required to register their valid Digital Signature Certificate (Class II or Class III Certificates with signing key usage) issued by any Certifying Authority recognized by CCA India (e.g. Sify / nCode / eMudhra etc.), with their profile.
5) Only one valid DSC should be registered by a bidder. Please note that the bidders are responsible to ensure that they do not lend their DSC's to others which may lead to misuse.
6) Bidder then logs in to the site through the secured log-in by entering their user ID / password and the password of the DSC / e-Token.

SEARCHING FOR TENDER DOCUMENTS

1) There are various search options built in the CPP Portal, to facilitate bidders to search active tenders by several parameters. These parameters could include Tender ID, Organization Name, Location, Date, Value, etc. There is also an option of advanced search for tenders, wherein the bidders may combine a number of search parameters such as Organization Name, Form of Contract, Location, Date, Other keywords etc. to search for a tender published on the CPP Portal.
2) Once the bidders have selected the tenders they are interested in, they may download the required documents / tender schedules. These tenders can be moved to the respective 'My Tenders' folder. This would enable the CPP Portal to intimate the bidders through SMS /e-mail in case there is any corrigendum issued to the tender document.

3) The bidder should make a note of the unique Tender ID assigned to each tender, in case they want to obtain any clarification / help from the Help desk.

PREPARATION OF BIDS

1) Bidder should take into account any corrigendum published on the tender document before submitting their bids.

2) Please go through the tender advertisement and the tender document carefully to understand the documents required to be submitted as part of the bid. Please note the number of covers in which the bid documents have to be submitted, the number of documents - including the names and content of each of the document that need to be submitted. Any deviations from these may lead to rejection of the bid.

3) Bidder, in advance, should get ready the bid documents to be submitted as indicated in the tender document / schedule and generally, they can be in PDF / XLS / RAR / DWF/JPG formats. Bid documents may be scanned with 100 dpi with black and white option which helps in reducing size of the scanned document.

4) To avoid the time and effort required in uploading the same set of standard documents which are required to be submitted as a part of every bid, a provision of uploading such standard documents (e.g. PAN card copy, annual reports, auditor certificates, etc.) has been provided to the bidders. Bidders can use "My Space" or ''Other Important Documents'' area available to them to upload such documents. These documents may be directly submitted from the "My Space" area while submitting a bid, and need not be uploaded again and again. This will lead to a reduction in the time required for bid submission process.

SUBMISSION OF BIDS

1) Bidder should log into the site well in advance for bid submission so that they can upload the bid in time i.e. on or before the bid submission time. Bidder will be responsible for any delay due to other issues.

2) The bidder has to digitally sign and upload the required bid documents one by one as indicated in the tender document.

3) A standard Price Schedule format (BOQ) has been provided with the tender document to be filled by all the bidders. Bidders are requested to note that they should necessarily submit their financial bids in the format provided and no other format is acceptable. If the price bid has been given as a standard BOQ format with the tender document, then the same is to be downloaded and to be filled by all the bidders. Bidders are required to download the BOQ file, open it and complete the Light Blue colored (unprotected) cells with their respective financial quotes and other details (such as name of the bidder). No other cells should be changed. Once the details have been completed, the bidder should save it and submit it online, without changing the filename. If the BOQ file is found to be modified by the bidder, the bid will be rejected.

4) The server time (which is displayed on the bidders' dashboard) will be considered as the standard time for referencing the deadlines for submission of the bids by the bidders, opening of bids etc. The bidders should follow this time during bid submission.

5) All the documents being submitted by the bidders would be encrypted using PKI encryption techniques to ensure the secrecy of the data. The data entered cannot be viewed by unauthorized persons until the time of bid opening. The confidentiality of the bids is maintained using the secured Socket Layer 128 bit encryption technology. Data storage encryption of sensitive fields is done. Any bid document that is uploaded to the server is subjected to symmetric encryption using a system generated symmetric key. Further this key is subjected to asymmetric encryption using buyers/bid openers public keys.

6) The uploaded tender documents become readable only after the tender opening by the authorized bid openers.

7) Upon the successful and timely submission of bids (i.e after Clicking "Freeze Bid Submission" in the portal), the portal will give a successful bid submission message & a bid summary will be displayed with the bid no. and the date & time of submission of the bid with all other relevant details.

8) The bid summary has to be printed and kept as an acknowledgement of the submission of the bid. This acknowledgement may be used as an entry pass for any bid opening meetings.

ASSISTANCE TO BIDDERS

1. Any enquiries relating to the tender document and the terms and conditions contained therein should be addressed to the Tender Inviting Authority for a tender or the relevant contact person indicated in the tender.

2. Any queries relating to the process of online bid submission or queries relating to CPP Portal in general may be directed to the 24x7 CPP Portal helpdesk. The contact number for the helpdesk is 1800 233 7315.

****

ANNEXURE-B

NATIONAL SCIENCE CENTRE
(National Council of Science Museums)
Bharion Road, Near Gate No. 2, Pragati Maidan,
New Delhi-110001

TENDER No. : NSCD/18011/E-Tender-No.10/2018-19

GENERAL TERMS & CONDITIONS (GTC) FOR SUBMISSION OF TENDER FOR FABRICATION & SUPPLY OF SCIENCE PARK EXHIBITS AT NSC, DELHI AS PER CENTRE'S SPECIFICATIONS.

On-line digitally signed E-Tenders are invited from agencies having proven experience and capable in executing the work of **Fabrication & Supply of Science Park Exhibits at National Science Centre, Delhi.** Essential conditions of the Tender are as below:

1. Submission of tender: 'Technical Bid (Part I)', should contain the following documents to establish the Bidder's eligibility to the bid and his qualification to perform the contract if his bid is accepted.

a) **EARNEST MONEY** : Bid should be submitted along with the **Earnest Money of ₹15,000/- (Rupees Fifteen Thousand only)** by way of crossed Demand Draft / Pay Order on any commercial banks or payment online by NEFT/RTGS payable in favour of "NATIONAL SCIENCE CENTRE" payable at Delhi (Bank details of NSCD is attached). Earnest Money deposit in the form of Bank Guarantee /Bond or any other instrument shall not be accepted and shall be rejected straightway. Earnest Money deposits in respect of such offers which are not accepted will be returned to the bidders within 30 working days from the date on which the final decision is taken about the source from which the items under tender are to be procured or within 2 (two) months from the date of the opening of the tenders, whichever is earlier. No interest will be paid on the Earnest Money deposited with the Council. Earnest Money deposit in respect of the successful bidders will be retained with the NSCD until entire execution of the order as per terms of the tender. If the successful bidder fails to execute the order strictly as per the NSCD's specification in full or part within the stipulated delivery period of the Letter of Intent, the Earnest Money deposit retained with the NSCD shall be forfeited forthwith after cancellation of the concerned order.
b) The issued bid document (excluding BOQ), signed on each page by the authorized signatory of the bidder.
c) Attested copy of the firm's partnership/ proprietorship deed/Memorandum of Association.
d) Power of Attorney in favor of the person signing the bid.

2. The firm must have valid TIN/GST/PAN Nos, Registration Certificates.

3. The successful tenderers shall submit the following documents within 7 (seven) days from the date of placement of the order
   i. Duplicate copy of the work order duly signed and stamped by the tenderer as a token of acceptance of the order.
   ii. The original copy of the Agreement governing the terms and conditions of the Contract on non-judicial stamp papers.
   iii. Security Deposit as contained in Clause No.15.

4. In case, the successful tenderer refuses to accept the offer after finalization or does not comply with the Clause No.3 within 7 (seven) days from the date of placement of the order as per the finalized and accepted terms & conditions, the order shall be cancelled forthwith without any further reference and the EMD will be forfeited.

5. The authorities of the centre reserve the right to amend, alter or modify the terms & conditions or quantities mentioned above if necessary.

6. The materials used by the successful tenderer shall conform to the decription and/or specification given by the centre. Sub-standard quality of materials will not be accepted. The samples must be got approved in advance from the competent authority of the centre.

7. Bad workmanship will not be accepted and if carried out is liable to be rejected and should be rectified by the successful tenderer at his cost as per specifications and directions given by the authorized representative of the centre. Decision of this centre, as to items of bad workmanship and proper replacement/rectification will be final and binding on the successful tenderer.

8. Modifications, as and when required during the execution, whenever suggested by the competent authority, have to be carried out. Successful tenderer shall take the responsibility of such modifications without any additional expenditure. Bad workmanship will not be accepted and if carried out is liable to be rejected and should be rectified by the successful tenderer at his cost as per specifications and directions given by the authorized representative of National Science Centre, Delhi. Decision of National Science Centre, Delhi, as to items of bad workmanship and proper replacement/rectification will be final and binding on the successful tenderer.

9. Specifications of the items under tender are as given in the enclosed drawings. However, if any ambiguity in the specification is detected it shall be promptly brought to the notice of National Science Centre, Delhi for clarifications. No deviation from the approved specifications shall be made by the successful tenderer without written approval of National Science Centre, Delhi.

10. The successful tenderer shall pay not less than minimum wages as prevailing in the concerned municipal area and shall abide by all and every kind of legislation that are incidental to and concerned with engagement of persons for the time being for carrying out and execution of the work. NSCD shall have no liability of any kind with regard to the workers of the successful tenderer.

11. The successful tenderer shall not under any circumstances whatsoever transfer wholly or partially this contract/agreement to any other person(s) firm/company or assign the contract/agreement or benefits of this contract/agreement to any other party for any reason whatsoever. Otherwise this contract/agreement will automatically stand cancelled.

12. The successful tenderer shall obtain necessary trade and other licenses as may be required to carry on the tendered job and shall also be responsible for compliance of all rules and regulations including the Contract Labor Regulations which may be in force from time to time by the appropriate authority at his/their own cost.

13. The successful tenderer shall ensure that all wages and allied benefits as per statutory norms are paid to their workers for the purpose of this contract. The Agency shall remain liable to the authorities concerned for compliance of respective existing rules and regulations of the Govt. for the purpose of this contract and shall remain liable for any contravention thereof. They shall keep NSCD indemnified against any liabilities arising out of non-compliance of any of the acts, rules, orders of the Govt./Council on their part.

14. FORFEITURE OF EMD:

In case the successful bidder fails to furnish security deposit or fails to submit the required documents at the time of agreement or does not turn up for agreement within the prescribed time limit, the EMD of the bidder shall be forfeited and the tender approval shall be cancelled.

15. PERFORMANCE SECURITY DEPOSIT:

The successful bidder will have to deposit the prescribed security **(10% of the approved tender value**) in the form of Demand Draft payable to "National Science Centre" payable at Delhi. Earnest money deposited by the successful bidder will automatically be adjusted towards the security deposit. No interest will be payable on earnest money or security in any case. The security deposit shall be payable to NSCD as compensation for any loss resulting from the contractor's failure to complete its obligations under the contract.
The successful bidder will have to sign the contract agreement and furnish the required security deposit within 15 days of the acceptance of the tender.

The security deposit is liable to be forfeited in case the bidder violates the terms and conditions of the agreement in any manner.

16. ACCESS:

The centre or its representatives shall, at all reasonable time, have free access to the works and/or to the workshops/factories or other places where the exhibits are being fabricated for the contract and also to any places where materials are lying or from which they are being obtained and the successful tenderer shall give every facility to them for inspection, examination and testing of the materials and workmanship. Except the representative of Public Authorities and those mentioned above, no person shall be allowed on the works at any time without the prior written permission of the centre.

17. INSPECTION:

i. The successful tenderer shall arrange for inspection of all raw materials by the authorized official of the Centre before the raw materials are used for fabrication of the ordered jobs.
ii. The successful tenderer shall also have to arrange for inspection of the job including other items at the site on completion of every stage and/or whenever desired by the authorized officer of the centre. Any defect pointed out by the authorized officer of this centre during such inspections has to be promptly rectified to ensure desired quality of work. It would be mandatory on the part of the successful tenderer to arrange for inspection and obtain approval of every stage of work including raw materials failing which action shall be taken as deem fit by the centre. The decision of centre in this regard shall be final and binding on the successful tenderer.

18. PAYMENT TERMS

No advance payment shall be made. Online Payment shall be released within 30 days after satisfactory supply of the exhibits and submission of Pre-receipted Tax-Invoice duly supported by receipted challan and satisfactory inspecton certificate issued by the competent authority of the Centre.

19. SCOPE OF WORK

The entire work viz. Fabrication & Supply of Science Park Exhibits at NSC, Delhi as per enclosed specification and drawings after obtaining approval at different stages of work.

Bad workmanship will not be accepted and if carried out is liable to be rejected and should be rectified by the successful tenderer at his/their own cost as per specifications and directions given by the authorized representative of the Centre. The decision of the Centre, as to items of bad workmanship and proper replacement/rectification will be final and binding on the successful tenderer.

The Centre shall not be liable for injury of any employee who is deployed by the successful tenderer within/outside the NSC, Delhi premises/site at the time of execution of the work.

20. TIME OF COMPLETION:

Time is the essence of this contract. The entire work shall be completed within **45 (Forty Five) days** from the date of placement of order. The work shall be executed as per the fabrication schedule given below. Inspection is to be carried out at the premises of the party at the end of each stage and if required in between also. If the progress of work is not found as per schedule, the order is liable to be cancelled and security deposit may be forfeited.

21. PENALTY CLAUSE

Every effort should be made to complete the work/job by the successful tenderer within the specified time schedule. In case the firm fails to comply with within the specified time schedule as per the finalized and accepted terms and conditions, the Centre shall have the right to either impose penalty (2% per week, subject to maximum of 10% of the quantum of work) or cancel the order. The decision of the Centre in this regard shall be final and binding on the successful tenderer.

22. DEFECT LIABILITY PERIOD:

The defect liability period shall be 12 (Twelve) months from the date of completion of the work. The successful tenderer shall be responsible for all defects in the exhibits supplied like defective workmanship, use of defective materials, de-colouring of material, strength of materials etc. for a period of 12 (Twelve) months from the date of completion of the job. The successful tenderer shall rectify the defects/defective parts within a reasonable time up to the satisfaction of the competent authority of the centre or otherwise the centre shall have the right to rectify the defect at the successful tenderer's own risk and the cost of which will be adjusted from the Security Deposit. Decision of the centre in this regard shall be final and binding on the successful tenderer.

23. DELAYS IN CONTRACTOR'S PERFORMANCE

Delay by the Contractor in the performance of its contractual obligations regarding performance of services shall render the Contractor liable to any or all of the following sanctions:

a) Penalty/cost of repairs as per Clause 21 above.

b) Forfeiture of its Security Deposit.

c) Termination of the contract for default. The termination of the contract for default shall be at risk and responsibility of the contractor.

If at any time during performance of the Contract, the Contractor should encounter conditions impending timely delivery of the goods and performance of service, the Contractor shall promptly notify to the NSCD in writing of the fact of the delay, its likely duration and its cause(s). As soon as practicable after receipt of the Contractor's notice, the NSCD shall evaluate the situation and may at its discretion extend the period of performance of the services ordered after mutual discussion with the Contractor.

24. All disputes and differences between the successful tenderer and the centre of any kind except quality of workmanship and materials whatever arising out of or in connection with the order on the carrying out the work (whether during the progress of the work or after their completion and whether before or after the determination, abandonment or breach of the terms and conditions of the order) shall be referred to the sole arbitration of a person nominated by the Director General, National Council of Science Museums, whose decision in this regard will be final and binding on both the successful tenderer and the Centre.

25. The provisions of the Arbitration and Conciliation Act 1996 or any statutory modification or reenactment thereof and of the rules made underthere for the time being in force shall apply to arbitration proceedings under this Council.

26. The Centre will not be responsible for any injury in and out of work places to any of the employees of the tenderer.

27. Drawings of exhibits provided should be used for fabrication of exhibits for NSCD and other units under National Council of Science Museums only. The tenderer under no circumstances will copy these exhibits wholly or partially for any other client.

****

ANNEXURE-C

NATIONAL SCIENCE CENTRE
(National Council of Science Museums)
Bharion Road, Near Gate No. 2, Pragati Maidan,
New Delhi-110001

TENDER No. : NSCD/18011/e-Tender No.10/2018-19

DECLARATION

We do hereby accept the "General Terms & Conditions" as provided by the National Science Centre along with the Tender documents for **Fabrication & Supply of Science Park Exhibits at NSC, Delhi** and also undertake to execute the job strictly as per the Technical Specifications of National Science Centre as provided along with the tender documents, in the event of placement of any order on us. The Centre shall be at liberty to cancel the order in full or in part the event of failure of any of the above declaration made by us.

Signature of the Bidder / Constituted Attorney.

ANNEXURE-D

NATIONAL SCIENCE CENTRE
(National Council of Science Museums)
Bhairon Road, Near Gate No.2, Pragati Maidan,
New Delhi - 110 001.

DECLARATION

This is to certify that I/We have no close relative as an employee of the National Council of Science Museums (close relatives means: Father, Mother, Brother, Sister, Son, Daughter and Spouse) nor any such close relatives are associated with us as Proprietor/Partner/Share Holder/ Director and like.

Signature of the tenderer
Address :

Official seal with date

ANNEXURE-E

NATIONAL SCIENCE CENTRE
(National Council of Science Museums)
Bharion Road, Near Gate No. 2, Pragati Maidan,
New Delhi-110001

TENDER No. : NSCD/18011/E-Tender No.10/2018-19

TECHNICAL (Techno-Commercial) BID

Notes**: ALL PARTICULARS / INFORMATIONS SHOULD BE GIVEN IN THE FOLLOWING FORMAT WITH COMPLETE DETAILS.**

1. Full Name of the bidder :
2. Address :
3. Telephones/Fax numbers/Email :
4. Whether proprietary/partnership/company :
   (documents to be enclosed)
5. Name(s) of proprietor/partners/All directors:
6. Name(s) and particulars of collaborators, :
   (If any, and type of collaboration with
   documentary evidence)
7. Address of works/Lab :
8. No. of employees Types of employees Number
   i) Service Engineers /
   ii) Others

9. i) PAN No.

   ii) TIN No

   iii) GST Regn.No.

   (Documents should be enclosed)

10. EPF / ESI No.

    (Documents should be enclosed)

I/We hereby declare that the above statements are true. I/We also declare that the decision of National Science Centre regarding selection of eligible firms for opening of Financial Bid (Part-II) shall be final and binding on me/us.

Dated **Official Seal** **Signature of the Tenderer/Constituted Attorney**

ANNEXURE –F

Specification for the Fabrication & Supply of Science Park Exhibits:

Following are the different types of exhibits to be fabricated.

A. Science Park Exhibits

1. **Tug of War** (as per drawing at Annexure I)
2. **Sympathetic Pendulum (Face to face)** (as per drawing at Annexure J)

1) Materials to be used should be strictly as specified in the supplied drawing, in case of any deviation prior approval of the centre need to be obtained. All materials are to be inspected and approved by the designated Engineer of NSC, Delhi before starting fabrication work.

2) Bought out items to be fixed are to be of best quality available in the market, duly approved by the centre.

3) All the welded joints are to be welded with proper current settings without under cut and cracks.

4) All M S items are to be applied with Asian / ICI make / Red Oxide Primer before the painting.

5) All the bush bearings are to be made of Phosphorous Bronze.

6) All the nuts and bolts where vibration are bound to happen are to be of Gr. 10.9 Unbrako Made. No other make of bolts will be acceptable.

7) Wherever fastener are to be used first GI plain washer then Spring washer with nut of appropriate size are to be used.

8) All bearings should be of SKF make only.

9) Use only latest stock of Asian / ICI make metal primer and Enamel Paint for metal surfaces. .

10) For any clarification at any point of time of the drawings, tenderer may contact the authority of National Science Centre, Delhi.

11) At the time of supply, all the required Grouting Bolt with Double Nut and 3mm thick GI washers are also to be supplied in required quantity.

12) All metal surfaces should be painted first with Metal Primer and then 2 or more coats of Enamel Paint of desired shade to give it to final finish.

13) All exhibits to be inspected in assembled condition & approved by the designated Engineer of NSCD before dispatching it to the destination.

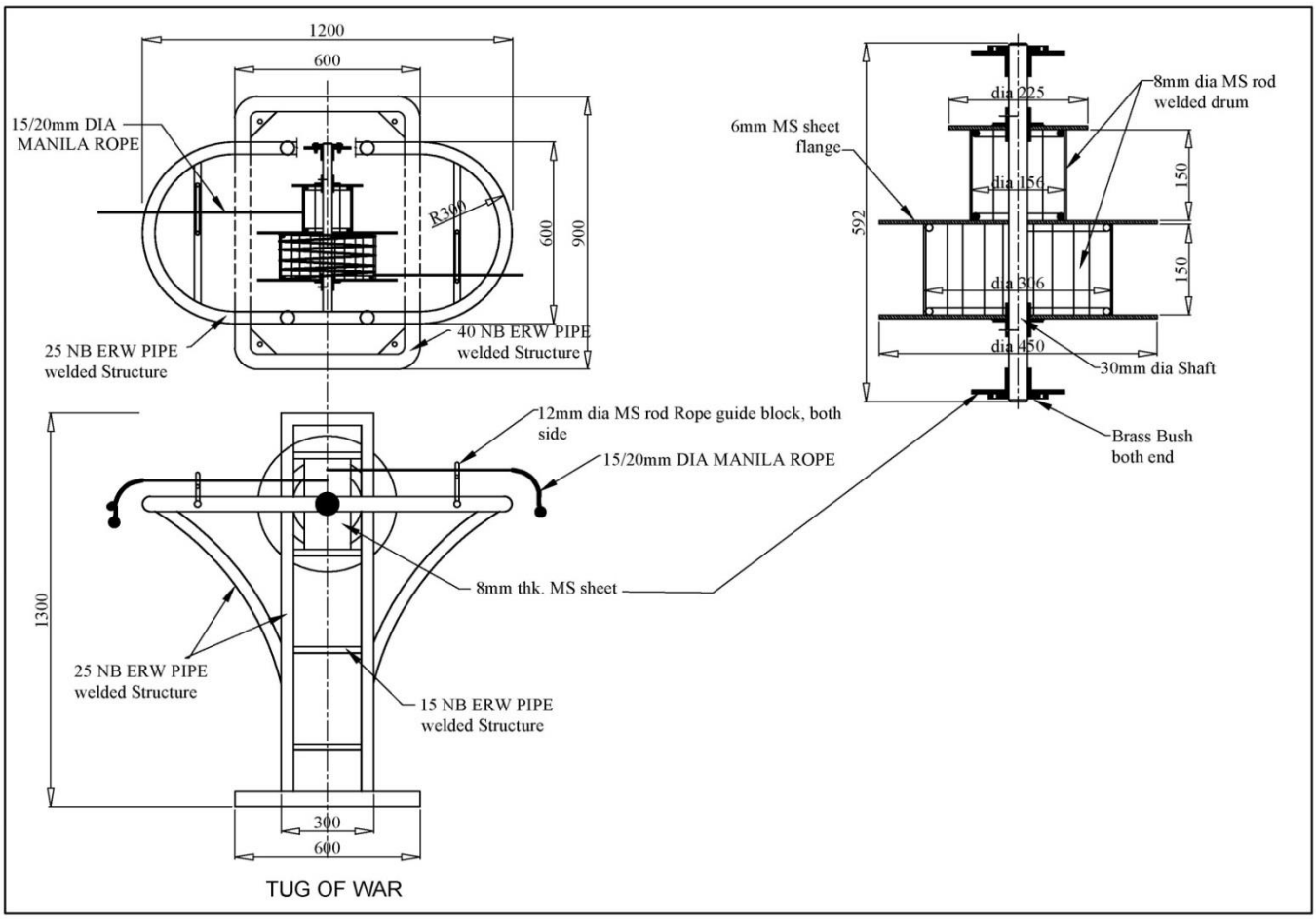
1200
600
15/20mm DIA
MANILA ROPE
R300
600
900
25 NB ERW PIPE
welded Structure
40 NB ERW PIPE
welded Structure
6mm MS sheet
flange
dia 225
8mm dia MS rod
welded drum
dia 156
150
592
150
dia 306
dia 450
30mm dia Shaft
Brass Bush
both end
12mm dia MS rod Rope guide block, both
side
15/20mm DIA MANILA ROPE
8mm thk. MS sheet
1300
25 NB ERW PIPE
welded Structure
15 NB ERW PIPE
welded Structure
300
600
TUG OF WAR

ANNEXURE - J

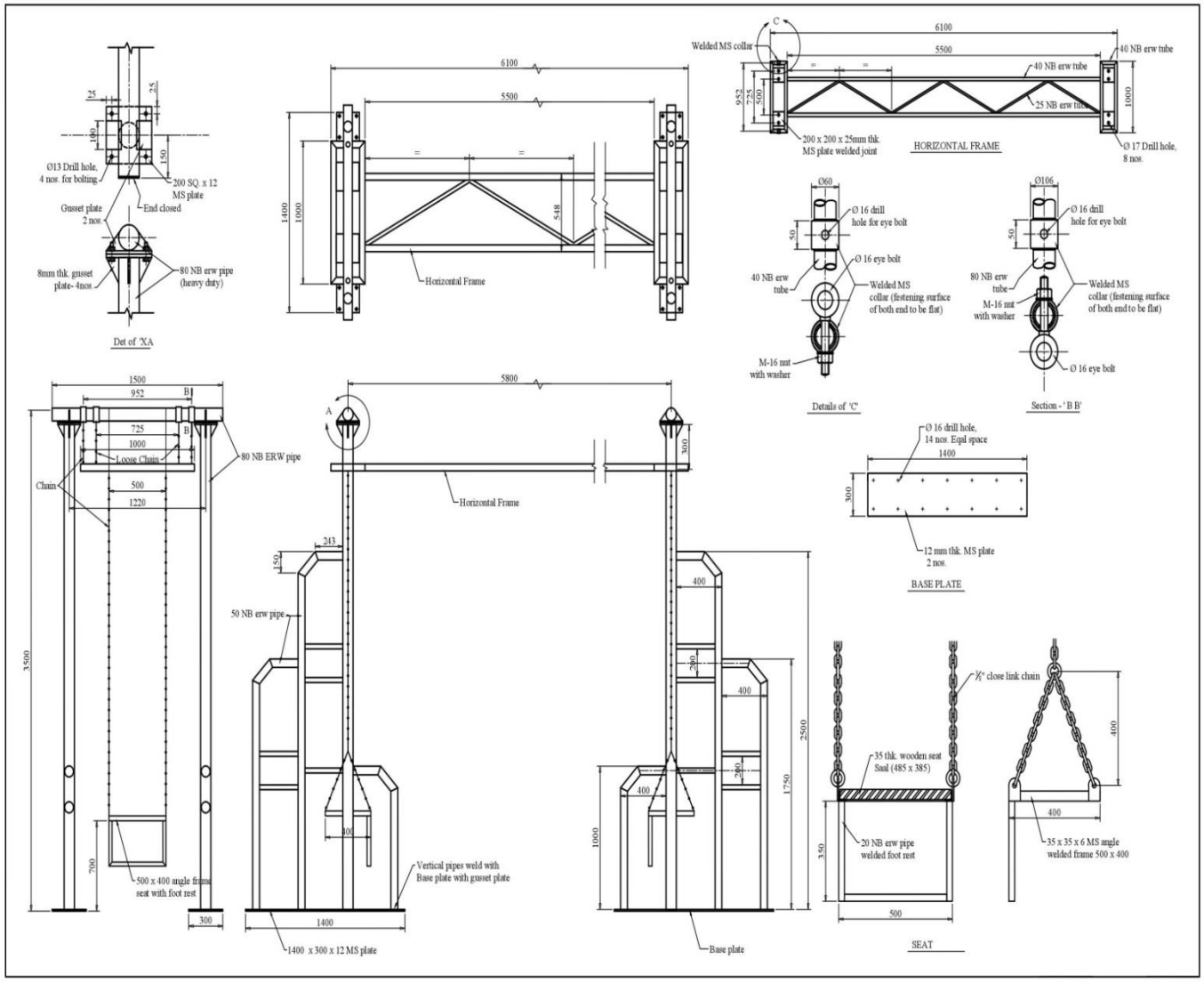

Det of 'XA
Ø13 Drill hole, 4 nos. for bolting
200 SQ. x 12 MS plate
End closed
Gusset plate 2 nos.
8mm thk. gusset plate- 4nos.
80 NB erw pipe (heavy duty)
Horizontal Frame
Welded MS collar
40 NB erw tube
25 NB erw tube
200 x 200 x 25mm thk. MS plate welded joint
HORIZONTAL FRAME
Ø 17 Drill hole, 8 nos.
Ø 16 drill hole for eye bolt
Ø 16 eye bolt
Welded MS collar (festening surface of both end to be flat)
M-16 nut with washer
Details of 'C'
Section - ' B B'
80 NB ERW pipe
Loose Chain
Chain
500 x 400 angle frame seat with foot rest
50 NB erw pipe
Vertical pipes weld with Base plate with gusset plate
1400 x 300 x 12 MS plate
Base plate
Ø 16 drill hole, 14 nos. Eqal space
12 mm thk. MS plate 2 nos.
BASE PLATE
¾" close link chain
35 thk. wooden seat Saal (485 x 385)
20 NB erw pipe welded foot rest
35 x 35 x 6 MS angle welded frame 500 x 400
SEAT

ANNEXURE-G

BANK DETAILS OF NATIONAL SCIENCE CENTRE, DELHI

Name of the Account Holder	NATIONAL SCIENCE CENTRE, DELHI
Account No.	2417101004100
Bank Name	CANARA BANK
Bank Address	6, Bhagwan Das Road, New Delhi
IFSC Code	CNRB0002417
MICR Code	110015045
Type of Account	Saving Account
Branch Code	2417
GST Number	07AAAAN2541C1Z5